Archway Warehouse, Jail and Powder Magazine Norway House

Manitoba

85-6130/

Manitoba
Culture, Heritage
and Recreation

© Historic Resources Branch
1985

Canadian Cataloguing in Publication Data

Main entry under title:
Archway Warehouse, jail and
powder magazine, Norway House

Cover title.
Bibliography: p.
ISBN 0-7711-0110-4

1. Historic buildings–Manitoba–Norway House.
2. Historic House (Man.)–Buildings. I. Manitoba

FC3399.N67Z57 1985 971.27'2 C85-097311-2
F1064.5.N67A72 1985

Archway Warehouse,
Jail and Powder Magazine
Norway House

Introduction

For the greater part of the nineteenth century Norway House was the crossroads of the Hudson's Bay Company's inland transport network. As such, the post acted as an inland storage facility for York Factory and, later, the upper and lower forts in the Red River Settlement. In addition to this important function, the annual meetings of the Company's Northern Department Council were often held at Norway House between 1835 and the late 1860s.

Norway House was built on the southeast corner of Little Playgreen Lake in 1827 and a fire destroyed the first post by that name, which had been located on the west bank of the Nelson River, near what is known as Warren Landing. The first Norway House had, in turn, replaced Jack River House which had been constructed in 1796 on the orders of Joseph Colen, the resident officer at York Fort. Today the Archway Warehouse and the jail, plus the ruins in the powder magazine, are the only tangible reminders of the past significance of Norway House in the fur trade and in the development of western Canada.

The Archway Warehouse was constructed in 1840-1841 and is, therefore, the oldest surviving warehouse in western Canada where Red River frame (pièces-sur-pièces en coulisse) construction was employed. Additionally it is the oldest log structure in Manitoba remaining at its original location. The powder magazine, built in 1837-1838, also predates any other stone structures of this type in western Canada. It is also unique for its time and place, as one would not expect to find cut limestone quoins and lintels on such a utilitarian building in Rupert's Land during the 1830s. The jail, built in 1855-1856, is the earliest surviving lockup in the province.

The Hudson's Bay Company and the Fur Trade

The emergence of Norway House as a significant post within the fur trade network was dependent upon the outcome of the struggle for control of that trade. In 1670 The Governor and Company of Adventurers trading into Hudson's Bay obtained a charter from Charles II of England granting them a monopoly of trade and exclusive possession of those lands, to be known as Rupert's Land, draining into Hudson Bay. Unfortunately for the Adventurers, or the Hudson's Bay Company as it became known, the French, operating out of New France, did not recognize the monopoly and a great rivalry quickly emerged between the two nations for the furs in the region. The growing violence of the competitors culminated in 1697 when the French captured York Fort, renamed it Fort Bourbon, and went on to dominate the fur trade for over a decade. The struggle between the two nations for control of the coastal fur trade was ended in 1713 with the defeat of the French in Europe. By the Treaty of Utrecht, the territory of Hudson Bay, including Fort Bourbon, was returned to England.

The inhabitants of New France, shut off from Hudson Bay, now sought an inland route to connect the St. Lawrence region with the fur bearing areas of the west. Initially the arrival of the French inland traders, such as La Vérendrye, did not unduly worry the Hudson's Bay Company, which still relied on a coastal trade. Furthermore, during the Seven Years War the French traders temporarily left their posts in the west. However, after 1763 aggressive Canadian traders returned, backed by British capital, to compete for the furs in Rupert's Land.

The return of the inland traders, most importantly the North West Company of Montreal, forced the Hudson's Bay Company to abandon its reliance on the coastal trade and create its own network of trading forts in the interior. The competition which developed between the Hudson's Bay Company and the Nor'Westers was frequently violent and included the Seven Oaks incident in 1816 which resulted in the death of 20 Red River colonists. The struggle was ultimately halted in 1821 with a union of the two rival companies. This union had particular significance for Norway House because it guaranteed the survival and growth of the Hudson's Bay Company's transport network, which centred on York Factory, and signalled the

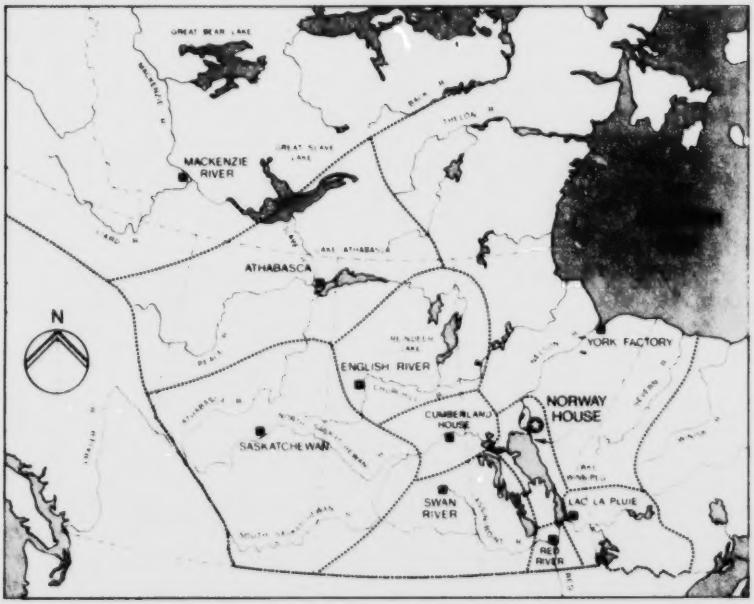

HISTORIC RESOURCES BRANCH

The Administrative Districts of the Hudson's Bay Company's Northern Department, with the black squares indicating the locations of the principal depots.

demise of the old route via Fort William and the Winnipeg River used by the Nor'Westers. The York boats would carry the furs north through Norway House to York Factory and thence to England. Consequently, from 1822 Norway House was increasingly used as a sub-depot for York Factory and a transhipment point for the Athabasca, and later for the MacKenzie River districts. Norway House became the neck of the funnel down which poured the inland fur returns and up which passed the annual 'Outfits' or supplies.

Life at Norway House

Despite the importance of Norway House within the Hudson's Bay Company's transport network, it was initially staffed by only a handful of men. In 1830 there was only one officer, along with four servants including a boat labourer, a boatbuilder and a fisherman. By 1840 the number had risen to 14, and by 1850 to 26. Of these about half were labourers, four were postmasters or interpreters, two were fishermen and one a mess waiter. The officer in command from 1830 to 1851, the highly competent Donald Ross, was in charge of inventory control and accounting. His postmasters took care of warehouse and clerical duties. A small group of new European recruits generally wintered at Norway House to help with construction or in the firewood and lumber camps before setting off for new postings in the spring. The employees were busiest during the crush of lake schooner and York boat traffic between the last week of June and the end of September.

MANITOBA ARCHIVES

York boats at Norway House, c1910.

Norway House depended heavily on local Indian freighters in the summer. Soon after Norway House was established, A Swampy Cree village developed across the river from the post. By the late 1830s it contained nearly one hundred people. Although George Simpson, Governor of the Northern Department, and Donald Ross feared that social problems might develop as a consequence of the proximity of the village to the post, they also recognized the benefits which would accrue to the Hudson's Bay Company if local crews replaced the more expensive and troublesome Red River Settlement crews on the York boat brigades which travelled between Norway House and the coast. Governor Simpson's solution was to assist with the establishment of a settlement, to be called Rossville, at a site approximately 3 kilometres south of the post. The settlement soon included a church, a school, a parsonage and a schoolmaster's house. In this manner, Simpson hoped to anchor the local population to a site near a good fishery and upon land with some agricultural potential, thereby arresting the migration of Swampy Cree families from along the Norway House-York Factory to the Red River Settlement.

In the following years the freighting activities increased. During the 1840s, 28 men and one guide manned four York boats on the spring trip, while 14 men made the fall trip in two boats. By the 1860s six boats were required on both the spring and fall trips. This growth was reflected by a proportionate increase in the population of Rossville. In 1843 nearly 200 inhabitants were living in the new village and this number had risen to nearly 300 by 1849. In 1854 it was reported that there were 40 dwellings located in and around the village. One outcome was a marked reduction in trapping by the residents of Rossville, who began to rely on the seasonal wage labour provided by the boats, the produce of their gardens, and the fishery for the necessities of life.

The Buildings of Norway House

Buildings on the scale of the large, general purpose Depot Warehouse at York Factory were not required at other Hudson's Bay Company posts. At Norway House prepackaged goods were usually housed in separate structures according to the district for which they were destined. Provisions for the crews of the inland boat brigades, principally flour and pemmican, fur returns, tallow and buffalo robes from the Red River Settlement were similarly stored. Since this forwarding and storage role evolved slowly, culminating in the middle decades of the century, additional structures were only added as they were needed. Naturally, these factors precluded the construction of one large building. Consequently, at the height of its importance in the middle of the nineteenth century, Norway House was comprised of numerous smaller buildings, each of which had a specific function.

A.V. THOMAS COLLECTION, MANITOBA ARCHIVES

"Norway House Women", 1910.

MANITOBA ARCHIVES

Inhabitants of Norway House, possibly the Indian Volunteer Fire Rangers, 1913.

The buildings were constructed around a rectangular compound, close to the waterfront, on the Nelson River. To the north and south of the compound were cultivated parcels of land, and the entire fort, excluding the western side, was surrounded by pasture land. The inner quadrangle was bisected by a raised walkway which connected the Archway Warehouse to the principal residences at the eastern end. On the northern perimeter stood the boat building and carpenter shops, along with two warehouses. On the southern perimeter stood the jail, provision store, sale-shop and depot.

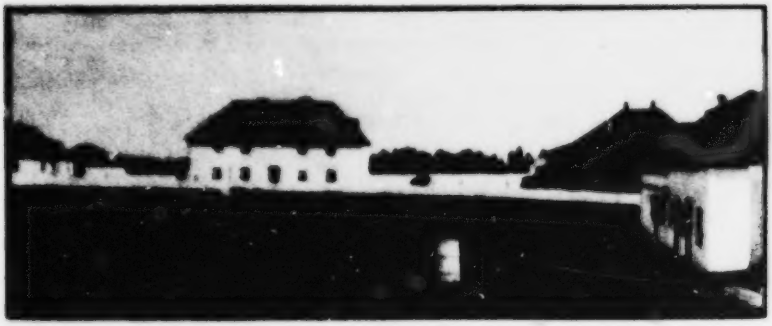

MANITOBA ARCHIVES

The Enclosure, Norway House, featuring the principal residence, 1919.

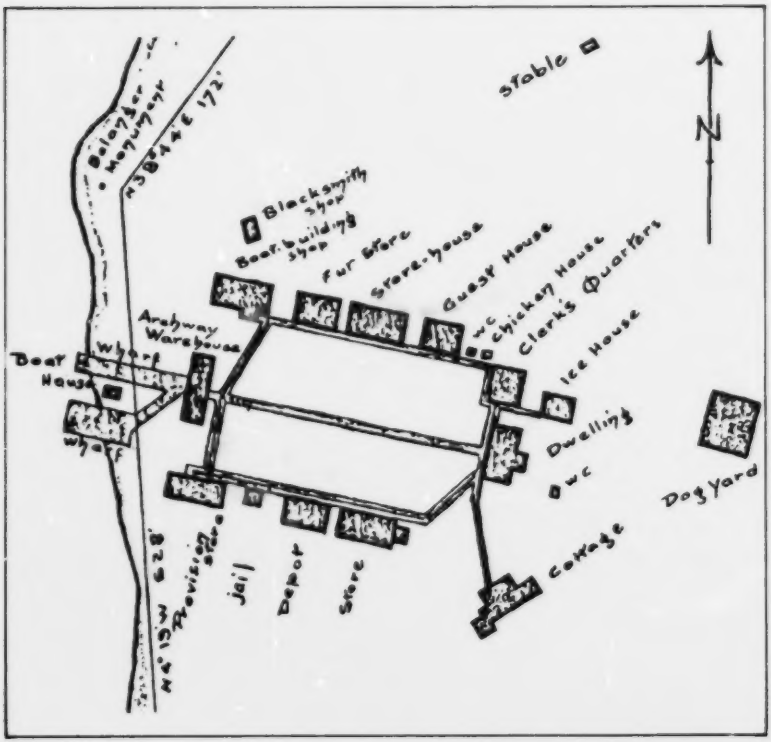

BASED ON A MAP LOCATED AT THE HUDSON'S BAY COMPANY ARCHIVES

Plan of Norway House from a survey done in 1900.

Quality of workmanship in construction at Hudson's Bay Company posts differed from location to location and according to the changing functions of each post. The location and the importance of a site usually determined the number of construction tradesmen stationed at a particular post and, therefore, the time and effort that could be spent on each project. Consequently, when Norway House was simply a transfer point where merchandise and furs were stored for brief periods of time each summer the

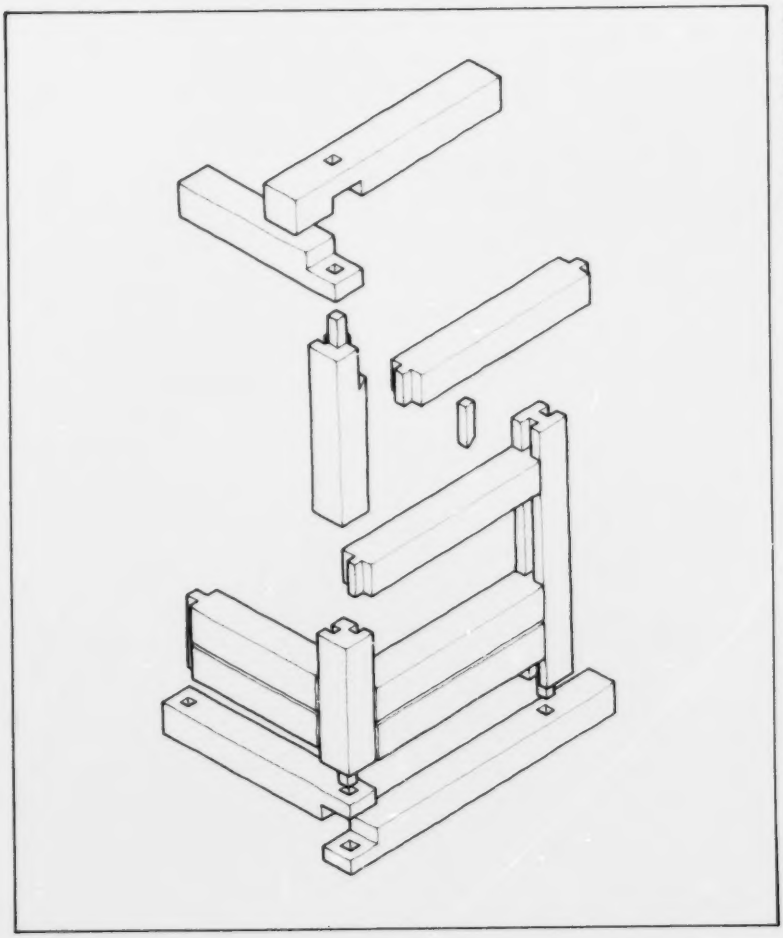

HISTORIC RESOURCES BRANCH

Red River frame (pièces-sur-pièces en coulisse) construction.

permanent complement of men was small, and construction was carried out by semi-skilled individuals. This meant that none of the warehouses constructed at the post prior to 1835 were elaborately built. Rather, a relatively simple technique, Red River frame, was used for wall construction. Thick horizontal logs were cut to fit between vertical support posts using mortise and tenon-style joinery. Small barked spruce trees took the place of sawn rafters and pine bark was used instead of shingles.

This situation began to change after 1835. Both the stone powder magazine, built in 1837-1838, and the Archway Warehouse, built in 1840-1841, were constructed in a more durable manner than earlier buildings at the site. As Norway House grew in stature in relation to the transport and supply system of the Company's Northern Department, Governor Simpson and the Council showed an increasing willingness to incur a large capital expenditure at the post.

The new warehouse and powder magazine were built as a direct result of Governor Simpson's fear of a major fire at York Factory. He proposed that a portion of the annual supplies, or 'Outfits', be conveyed to Norway House every summer for storage over the winter months. Also, in order to promote the development of the Red River Settlement, Governor Simpson encouraged the export and consumption of the colony's products. Wherever possible Red River flour, grease and pemmican replaced more expensive English provisions, even at coastal stations.

The Archway Warehouse, because of its waterfront location, probably served a dual role in the first twenty years of its existence. During the summer freighting season the main floor was likely used for temporary storage. In the winter months it probably contained prepackaged merchandise to be shipped to Red River and various other districts upon the opening of navigation. Consequently, it helped to eliminate the overcrowding which had developed, thereby allowing a return to the system of providing separate warehouses for the Athabasca and MacKenzie River districts and the provisions and goods for the Norway House trading shop and employee saleshop.

The Archway Warehouse

Preliminary work on the Archway Warehouse began in December 1839 when Donald Ross sent three carpenters and three labourers up the Jack River to cut the necessary wood. However, it was the following July before the workers could find time to level the ground so that the wooden surface foundation for the warehouse could be laid. Work continued to proceed slowly for there were constant interruptions as the freighting season was well under way. The framework was completed in September and the walls were up by the end of November, at which time outdoor work was suspended for the remainder of the winter.

In addition to their usual winter employment of constructing York boats, the three carpenters also prepared the boards for the roof and the floor planks, which were then seasoned in the rafters of the men's residence. The building of window frames was the last indoor project before the carpenters, assisted by labourers, resumed outdoor work on the building in the spring. Unlike other previously constructed buildings at the site, the new warehouse was shingled, probably with oak shakes. Unfortunately the supply at hand was soon exhausted and some 11,200 shingles had to be obtained from the Red River Settlement. Consequently, it was late August before the building was completed. Graffiti found during restoration work indicates that the weatherboarding was not added until 1864. The belfry was not an original feature; it was installed sometime between 1878 and 1890.

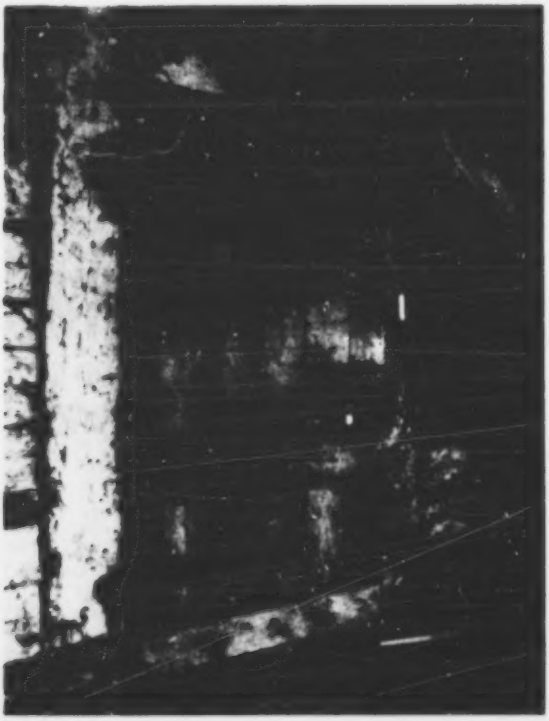

HISTORIC RESOURCES BRANCH

Archway Warehouse Door, illustrating the original lock and hinges, 1982.

MANITOBA ARCHIVES

The Archway Warehouse from the Enclosure, 1947.

Stylistically, the Archway Warehouse is very similar to other storage facilities constructed by the Hudson's Bay Company between 1821 and 1870 at its key distributional centres in the Northern Department. These structures were usually two to three times as long as wide, which is in keeping with the Archway's overall dimensions of 21 by 9 metres. Other common features are a hipped roof and raised second floor walls approximately one metre above the main floor ceiling, thereby providing a small outside wall which creates more space in the loft. This general form was utilized whether the mode of construction was Red River frame, as at Norway House, or frame and weatherboard, as at York Factory and Upper Fort Garry. Like the extant stone fur store/saleshop and warehouse at Lower Fort Garry, the Archway Warehouse displays a fine silhouette, symptomatic of the earlier Georgian sensitivity to proportion that had been so popular in Britain and colonial America in the late 1700s.

However, the Archway Warehouse also contains a number of unique features. None of the ground floor windows overlook the waterfront. While it may be anticipated that this plan was adopted as a precaution against burglary, it does not account for the fact that the entire building was originally located behind a palisade. Similarly, it does not suggest why the loft was illuminated by only four small windows, situated near the floor and centrally located on each side. This was in direct contrast to the other warehouses at the fort which contained more numerous dormer windows. The explanation for this

apparent anomaly probably lies with the intended role of a particular structure. In a warehouse where the selection, sorting and packaging of merchandise and furs for transhipment was the primary concern, more windows were installed because of a Company policy which prohibited the use of candles or lanterns, as a precaution against fire. The Archway Warehouse, which was used to store prepackaged goods, therefore required fewer windows. Furthermore, window glass was an expensive commodity, particularly at the inland posts.

The archway leading through the warehouse is also unique among contemporary structures in the Northern Department. The warehouse had been built near the waterfront on one of the few available and suitable sites. The passageway was a logical response to the resultant problem of providing access to the rest of the fort. Perhaps Chief Factor Donald Ross was also harkening back to the early days of his career when he was a clerk at York Factory, where the old 'Octagon' building was accessible by a similar entrance.

The Powder Magazine

The decision to construct a stone powder magazine at Norway House was also further confirmation of the growing importance of the post as an inland depot. Donald Ross and Governor Simpson believed that by dividing the gunpowder between Norway House and York Factory the risk involved might also be divided. An existing Red River frame building was considered, and then deemed unsuitable, probably because it was not fireproof. Consequently, work on a safer, more durable stone building which was to be isolated from the main buildings in case of an accident commenced in August 1837 when two masons arrived from the Red River Settlement, where they had been employed in the building of Lower Fort Garry. They continued to work on the walls until the onset of winter halted proceedings. The walls, measuring 6 by 6½ metres were constructed mainly of granite blasted from a nearby site. The quoins and door and air vent lintels were cut limestone quarried in the Red River Settlement. The masonry work was finished in the spring of 1838. In July the two post carpenters constructed the hipped roof which they then covered with boards and shingles. The interior ceiling was subsequently lathed and then it was plastered, along with the interior walls. The final task was the installation of raincaps on the peaks, which took place at the end of August.

It appears that the magazine was not fully used during the first few years of its existence for, in August 1841, Donald Ross was moved to question York Factory's Chief Factor's lack of foresight in not sending powder up to Norway House. It was used for this purpose thereafter until 1885, when the last regular York boat brigade between the two posts was eliminated as a cost cutting measure. Inspecting Chief Factor James McDougall visited Norway House in

MANITOBA ARCHIVES

The Powder Magazine, 1947.

HISTORIC RESOURCES BRANCH

The Ruins of the Powder Magazine, 1982.

1889 and reported that, although the foundations were sinking in one corner, the magazine would probably remain in serviceable condition for some years. However, by 1896, the district gunpowder was stored in the jail, and later records indicate that the old magazine was used to store fodder.

The Jail

The jail at Norway House, built in 1855-1856, was not the first in Rupert's Land. In 1822 the Hudson's Bay Company initiated a system of general courts in order to pre-empt any attempts by the governments of Upper and Lower Canada to create judges and courts in Rupert's Land, powers which had been granted to them by an 1821 Act of the British Parliament. Consequently, most civil and criminal cases involving the settlers of the Red River Settlement were heard by the Council of Assiniboia, while those cases involving the inhabitants of the rest of British North America, excluding those on the Pacific Coast, were heard by the Council of the Northern Department. In 1839 Adam Thom was appointed as the first Recorder (or magistrate) of Rupert's Land and he administered the Company's judicial system and presided at a general quarterly court.

There were at least two jail buildings at Upper Fort Garry. The first one was apparently located within the fort and was in existence in 1838, while the second, which was also a small wooden structure, was located outside of the fort walls. A small wooden jail was also erected at York Factory in 1841 to hold a young man sentenced to one year of hard labour on a charge of manslaughter. This building was torn down in 1851.

By the mid-1850s, the general development of Rupert's Land was such that Governor Simpson felt the time was right for the gradual introduction of social institutions in the entire Northern Department. To this effect the Council of 1854 passed a resolution invoking a 12½ per cent tariff on all imported goods in order to supplement the salaries of the Recorder and the Governor of Assiniboia, the expense of circuit courts, the administration of civil and criminal law, the funding of school and mission grants, and the erection of any jails which might be required. Norway House, as a crossroads in the transport system was the logical site for construction of a new jail.

The site chosen for the new jail was an exposed granite outcrop adjacent to the east end of the provision, or south, store. In the summer of 1855 the rock required to build the jail was boated to Norway House from a nearby site. The actual construction did not start, however, until the middle of September, for it took some time to level the land and to prepare the lime for the mortar. A professional mason was not employed, which explains the unadorned nature of the stonework. The construction of the walls was not completed until the

MANITOBA ARCHIVES

The Jail, c1930.

following May, when the hipped roof and plasterwork were added. The building was finished in June 1856 when internal partitions were installed.

When the supervision of this region, known as the District of Keewatin, was passed to the Lieutenant-Governor of Manitoba in 1876, the Company's justice system was initially unaffected. By 1889, however, a new Lieutenant-Governor, John Christian Schultz, was taking initiatives to impose greater law and order in the region. Schultz obtained permission from the Hudson's Bay Company to use the Norway House jail as a temporary government facility until he could arrange for a permanent jail. Consequently, the jail remained available for use until 1892, when a government jail was constructed on an island opposite Rossville. The Company jail was subsequently used for storing gunpowder.

The Decline of Norway House as a Hudson's Bay Company Post

The role of Norway House within the Hudson's Bay Company's transport system had been guaranteed by the victory for the northern route via York Factory in 1821. However, with the decline of this route, Norway House also began to lose its importance, to the detriment of the local inhabitants and the buildings. Increasingly, the cart brigades, and later the Red River steamboats, travelling south to connect with the American railway, carried more and more of the freight which had previously travelled to York Factory. During the 1860s York Factory was gradually replaced by Upper Fort Garry and, to a lesser extent, by Lower Fort Garry, as the supply and sub-administrative centre of the Northern Department. At this time, however, Norway

MANITOBA ARCHIVES

An aerial view of Norway House, 1925.

House remained an important transhipment point. This was especially true prior to the establishment of the Hudson's Bay Company's first regular steamboat services on Lake Winnipeg and the Saskatchewan River, in 1872 and 1874 respectively. Many of Norway House's warehouse duties remained; the goods, however, were increasingly from the Red River depot rather than from York Factory. The situation changed in the 1870s and the storage facilities at Norway House were underutilized. The Hudson's Bay Company relied on steamboats and, later, railways to move its freight. Norway House gradually lost its role as a transfer point and, like York Factory before it, simply became the central post in a relatively minor trading district.

In the early 1930s Norway House looked much the same as it had in 1880. However, the austerity measures which the Company was forced to adopt later in that decade resulted, as at York Factory, in the demolition of many old buildings. This process continued until the 1960s, by which time the jail and the Archway Warehouse were the only remaining early structures. The powder magazine, which had been empty and derelict for some time, was largely demolished in 1963 and only portions of three walls are now standing. The Archway Warehouse probably escaped demolition because of its convenient location, near both the waterfront and the retail shop erected in 1937, not because it was considered inherently more valuable than the other structures. The jail was considered redundant in the 1930s;

however, it was structurally sound, resting upon bedrock, and as it was close to the Company's other remaining buildings, it was used to store petroleum products.

Significance

Although many of the early buildings are now gone, Norway House is a reminder of the past importance of the fur trade and the Hudson's Bay Company in the history and development of western Canada. The Archway Warehouse is architecturally significant as it is the oldest surviving warehouse in western Canada where Red River frame construction was employed. It is also the oldest log structure in Manitoba remaining in its original location, and the third oldest warehouse building in western Canada. The James Fraser house, now located at Lower Fort Garry, may be older, but its date of construction, circa 1835, has not been confirmed. It should be noted that despite certain unusual features, the Archway building was not unique at the time of its construction. It was typical for its period and, consequently, can be differentiated from the Depot at York Factory, which had square dimensions, a central courtyard, and two levels, and the two remaining stone buildings at Lower Fort Garry, which are really somewhat atypical. The remains of the stone powder magazine are the oldest in western Canada for a building of this type, although the ruins of the stone magazine at York Factory are only a year younger. The jail is the oldest surviving in the province. The earlier lockups, all of wood construction, were located at either Upper Fort Garry or York Factory and were demolished in the nineteenth century. The jail is representative of the evolution and eclipse of the Hudson's Bay Company's justice system in its Northern Department, and it is indicative of the crucial position which Norway House occupied as the crossroads of the Company's transport network.

Bibliography for Further Reading

For a general survey of the development of western Canada, A.S. Morton's *A History of the Canadian West to 1870-71* and W.L. Morton's *Manitoba: A History* are standard works which contain useful chapters on the emergence of the province out of the vast territory which had been Rupert's Land. A recent and important study is Gerald Friesen's *The Canadian Prairies: A History*. Many interesting and informative articles appear in *The Beaver*, published by the Hudson's Bay Company, including a succinct yet lively series concerning the history of the Company by Glyndwr Williams which appeared in 1970. A number of manuscripts printed by Parks Canada are also available, including Philip Goldring's *Papers on the Labour System of the Hudson's Bay Company, 1821-1900*, Manuscript No. 412, Bruce Donaldson's *York Factory: A Land-Use History*, Manuscript No. 444 and Gregory Thomas' *Lower Fort Garry National Historic Park: A Period Landscape Study*, Manuscript No. 407.

ᑭᓄᓴᐃᓐ ᓯᐱ

ᑭᓄᓴᐃᓐ ᓯᐱᖅᑐᑦ ᑭ ᒪᒪᐃᓐᐸᓂᐊᓐᑦ ᐊᓂᖅᐃᑦ ᑲ ᑭ ᐊᑐᖅᑲᐊᓐᒋᑦ ᖅᐊᓯᓱᑦ ᐯ ᑯᐸᓂ ᖃᑦ᐀ ᖃᑦ᐀ ᓂᓱᑕᓄᑦ ᒥᑕᑐᒥᑕᓄᑦ ᑕᑐ ᐊᖅᑭᐃᓐᓂᖅᑦ. ᓂᖅᑐ ᐅᓯᑕᐃᓐᓇ -- ᓯᐸᐸᓂᐃᓐᑦ. ᑭᐸᖅᐅᑐᐃᓐᑲᒥᑦ. ᒥᓇ ᑲᖅᑭᐃᓐᑲᒥᑯᑦ -- ᐃᖅᑯᐸᓂᐊᓐ ᑕ ᑭᖅᑭᓂᑕᒪᑦ ᑕᓐᑯᑦ ᑲ ᑭ ᐃᓯ ᑭᒋᓂᐸᓂᑦ ᐅᒪ ᐃᑕᐃᓐᑦ ᐅᑕ ᐊᖅᑭᖅᑦ.

ᓯᐸᐸᓂᐃᓐ ᐊᖅᑕᓯᐃᓐᑲᒥᑦ. ᐁ ᑭ ᐅᓯᑕᒋᑦ 1840-41. ᐊᐊᓐᓯᒥ ᕿᒥᒥᐃᓂ ᒥᑯ ᓯᐱ ᓇᐸᑭᒥᑎᑯ ᐊᖅᑕᓯᐃᓐᑲᒥᑲᑦ ᓇᑲᐸᓇᓄᖅᑦ ᑲᓇᑕ ᐁᑲᓐ ᒥᓇ ᐊᐊᓐᓯᒥ ᕿᒥᒥᐃᓂ ᒥᖅᑎᑯᓯᖅᑕᐃᓐᑦ ᕿᔭᐱᓐ ᑲ ᐊᖅᑭᑦ ᑕᓂᑎ ᑲ ᑭ ᐅᖅᑲᐃᒋᑲᑭᑦ. ᑭᐸᖅᐅᑐᐃᓐᑲᒥᑦ. ᐁ ᑭ ᐅᓯᒋᑲᑭᑦ 1855-56. ᐊᐊᓐᓯᒥ ᕿᒥᒥᐃᓂ ᑭᐸᖅᐅᐃᓐᑲᒥᑦ ᑎᐸᖅᐊᖅᑲᓂᖅᑦ. ᑯᑕᑭᔭᑦ ᒥᖅᑎᑯᐃᓐᑲᒥᑲᓐ ᑲ ᑭ ᐅᓯᒋᑲᑭᑭ ᓂᖅᑕᑦ ᐃᖅᐱᒥᑦ ᐊᓯᓂᐃᓐᑲᒥᑦ ᑲᑉᐃᖅᑦ ᒥᓇ ᑭᒋᐊᖅᑲᔭᑲᓂᖅᑦ ᑭ ᐊᑎ ᓇᓯᕿᐸᔭᑲᑭᐊᓐ. ᑲᖅᑭᐃᓐᑲᒥᑯᑦ. ᐁ ᑭ ᐅᓯᒋᑲᑭᑦ 1837-38. ᓂᖅᑕᑦ ᐊᓯᓂ ᐊᖅᑲᔭᑲᑦ ᑲ ᑭ ᐅᓯᒋᑲᑭᑦ ᒪᓂᑐᐱᑦ. ᐊᑕ ᐊᓄᓐ ᐁ ᐱᑯᓯᑕᖅᑭᑦ. ᑕᓂᓯ ᑲ ᑭ ᐃᓯ ᐅᓯᒋᑲᑭᑦ ᑭ ᒪᒪᖅᑲᒋᓇᑲᑦ. ᑲ ᐃᖅᑲᓐᓯᑦ ᐊᓯᓂ ᑕᐯᒋᒋᑲᓇ ᒥᓇ ᐃᖅᑲᓐᑭᑦ ᐱᒧᑕᑲᓇ ᓇᑕᐁᓐ ᒥᖅᑲᒥᓇᐊᓐ ᑯᑕᑭᔭᑦ ᐊᓐᖅᑲᔭᑲᑦ ᐗᐊ ᐊᐊᓐᓯᒥ ᐁ ᒥᓇᓐᓯᑭ. ᐅᑯ ᐊᓯᓂᔭ ᑭ ᐅᑎᓇᐊᓐᑦ ᒋᑭᓐ ᒐᐸᓯᑦ ᐊᓯᓂᐃᓐᑲᒥᑦ ᑲᑉᐃᐃ.

ᒪᓂᑐᐸ ᑲᔭᑦ ᐅᒋ ᐊᖅᑭᔭ
ᐃᓐᒋᔭᑕᐊᓐᑦ ᐅᒋ ᒪᓂᑐᐸ

Norway House

Norway House was the crossroads of the northern transport network of the Hudson's Bay Company during most of the 19th century. Three structures – the Archway, jail and powder magazine – survive as tangible reminders of the importance of this place in western British North America.

The Archway Warehouse, built in 1840-1841, is the oldest surviving Red River frame warehouse in western Canada and is Manitoba's oldest log edifice on its original site. The jail erected in 1855-56, is the oldest extant lockup in the province. Earlier wooden structures at Upper Fort Garry and York Factory have been demolished. The powder magazine, erected in 1837-38, was the first built of stone in Manitoba. Though now in ruins, its style of architecture was notable for the use of cut limestone corner blocks and lintels usually found on more sophisticated buildings. These stones were quarried near Lower Fort Garry.
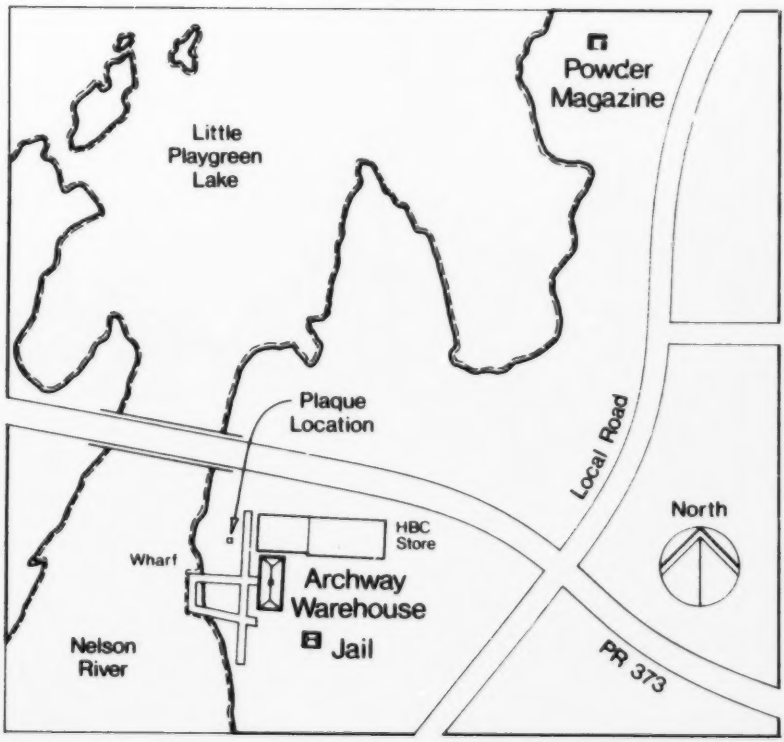
The Historic Sites Advisory Board of Manitoba